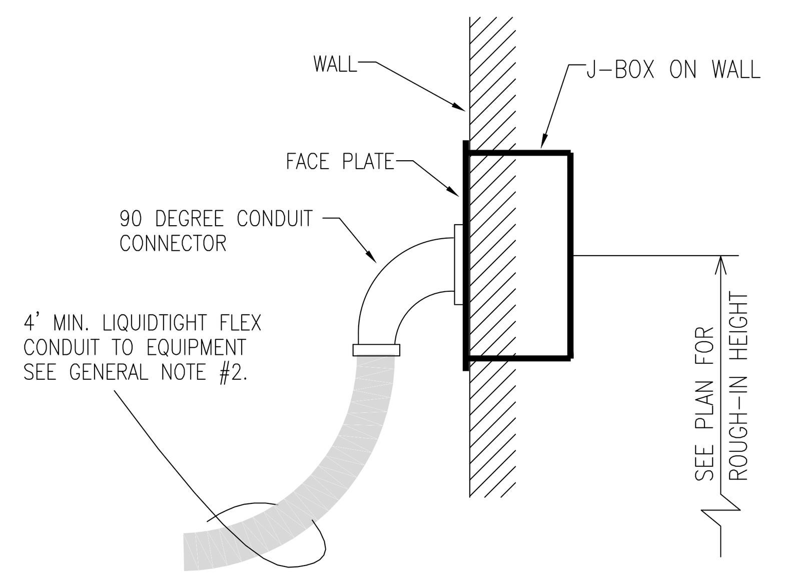

2 E4.01 POWER CONNECTION DETAIL
NOT TO SCALE

PANEL SCHEDULE LABELING

ALL SCHEDULES ARE TO BE 100% ACCURATE, ON CARD STOCK, TYPED, DATED, AND INSTALLED IN A CLEAR POCKET. THE ELECTRICAL CONTRACTOR SHALL GO THROUGH ALL EXISTING PANELS TO TRACE AND VERIFY ALL CIRCUITS FOR ACCURACY. RECEPTACLES AND LIGHTING ARE TO BE LABELED BY AREA/LOCATION. SALES FLOOR LIGHTING CIRCUITS ARE TO INCLUDE ROW NUMBER. CASE CIRCUITS ARE TO REFERENCE REFRIGERATION CIRCUITS. "SPARE" IS A BREAKER WITH NO WIRE. "BLANK" IS AN EMPTY SLOT. ALL WIRED AND ACTIVE BREAKERS SHALL BE PROPERLY SCHEDULED. NOTE: WIRED BREAKERS WITH NO ACTIVE LOAD/DEVICE SHALL BE LABELED AS "SPARE", WITH ENDING LOCATION INDICATED. DO NOT REMOVE EXISTING PANEL SCHEDULES. ELECTRONIC COPIES OF ALL PANEL SCHEDULES ARE REQUIRED AT CLOSEOUT. (CRESCENT POST-66)

BREAKER LUG SIZES

IF CIRCUIT BREAKER LUGS WILL NOT ACCEPT SCHEDULED WIRE SIZE, THEN CONNECT TO BREAKER WITH LARGEST SIZE THAT BREAKER WILL ACCEPT. SPLICE TO SCHEDULED SIZE IN SEPARATE JUNCTION BOX WITHIN 10'-0" OF PANEL.

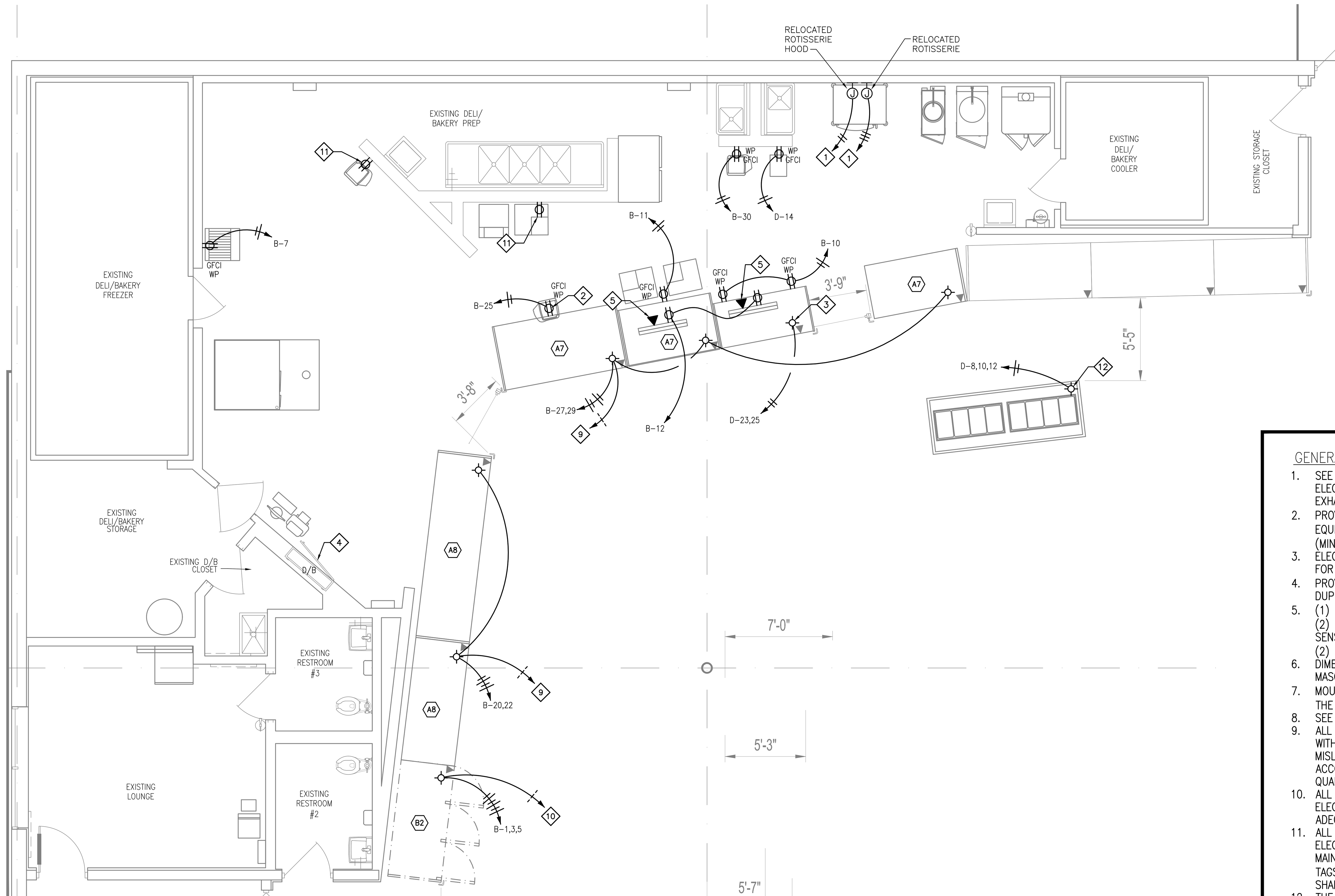

1 E4.01 DELI/BAKERY ELECTRICAL PLAN
SCALE: 3/16" = 1'-0"

LEGEND:

- DUPLEX RECEPTACLE
- QUAD RECEPTACLE
- JUNCTION BOX
- GFI GFCI TYPE RECEPTACLE
- WP WEATHERPROOF RECEPTACLE
- SPECIAL USE RECEPTACLE – VOLTAGE, PHASE AND AMPERAGE BASED ON LOAD SERVED. COORDINATE NEMA CONFIGURATION WITH EQUIPMENT REQUIREMENTS.
- $ SWITCH
- DISCONNECT SWITCH
- ELECTRICAL DROP FROM OVERHEAD
- ELECTRICAL STUB-UP
- A TELEPOWER POLE – LETTER INDICATES MODEL #
- XX REFRIGERATION CIRCUIT #

GENERAL NOTES:

1. SEE MECHANICAL DRAWINGS FOR KITCHEN HOOD SCHEDULE. ELECTRICAL CONTRACTOR TO MAKE FINAL CONNECTIONS TO EXHAUST FAN, LIGHT, & SWITCHES.
2. PROVIDE SEAL-TITE FLEX ON ALL DELI/BAKERY EQUIPMENT/CASES: 3 FT. (MIN.) ON FLOOR CIRCUITS AND 4 FT. (MIN.) ON WALL CIRCUITS.
3. ELECTRICAL CONTRACTOR SHALL PROVIDE ALL CONTROL WIRING FOR SHUNT TRIP SYSTEM AT EXHAUST HOOD AND EQUIPMENT.
4. PROVIDE 1'-0" OF FLEX CONDUIT AND A 2"X4" BOX WITH A DUPLEX RECEPTACLE.
5. (1) 4-CONDUCTOR SHIELDED CABLE (#22 AWG OR LARGER)
(2) CONDUCTOR (BLACK & WHITE) – FOR TEMPERATURE SENSOR
(2) CONDUCTOR (RED & GREEN) – FOR DEFROST TERMINATION
6. DIMENSIONS ARE SHOWN FROM INTERIOR SURFACE OF EXTERIOR MASONRY BUILDING WALLS.
7. MOUNT FLY TRAPS AT 5'-0" ABOVE THE FINISHED FLOOR IN THE DELI/BAKERY AND PRODUCE PREP.
8. SEE SHEET E1.02 FOR TELEPOLE INFORMATION.
9. ALL ELECTRICAL WIRING WILL BE DONE IN STRICT ACCORDANCE WITH THE N.E.C. NO COLOR CHANGES IN WIRE RUNS, MISLABELED CIRCUITS, ETC. ALL WIRING SHALL BE DONE IN ACCORDANCE WITH FOOD LION STANDARDS. ONLY NEAT, FIRST QUALITY WORK WILL BE ALLOWED.
10. ALL BRANCH CIRCUIT PANELBOARDS SHALL BE VACUUMED. ALL ELECTRICAL ENCLOSURE COVERS SHALL BE INSTALLED AND ADEQUATELY SECURED TO OBTAIN PROJECT CLOSE OUT.
11. ALL BRANCH CIRCUIT PANELBOARDS, SAFETY DISCONNECTS, ELECTRICAL DISTRIBUTION EQUIPMENT, MAIN BREAKERS, AND MAIN SERVICE DISCONNECTS SHALL BE LABELED WITH PHENOLIC TAGS, BLACK ON WHITE, 1.5" TALL. DISTRIBUTION SECTIONS SHALL BE LABELED ACCORDING TO ARC FLASH LABELS.
12. THE ELECTRICAL CONTRACTOR SHALL PROVIDE AND INSTALL CORRECTED TYPE WRITTEN PANEL SCHEDULES IN ELECTRICAL PANELS, NEW AND EXISTING, AT THE END OF THE PROJECT. HAND WRITTEN SCHEDULES SHALL BE MAINTAINED THROUGHOUT THE PROJECT.
13. SCALES SHALL BE FED FROM A CIRCUIT THAT IS CONTINUOUSLY ENERGIZED (NOT CONTROLLED BY THE ENERGY MGMT SYSTEM)
14. COORDINATE REMOVAL/REPLACEMENT OF REFRIGERATED CASES WITH THE REFRIGERATION CONTRACTOR AND THE FOOD LION CONSTRUCTION MANAGER.
15. REMOVAL/RELOCATION OF ECOLAB FLY TRAPS IS TO BE COORDINATED WITH VENDOR VIA FOOD LION CONSTRUCTION MANAGER. EC TO PROVIDE POWER.

DELI/BAKERY POWER PLAN KEY NOTES

1. EXISTING EQUIPMENT – RELOCATED. PROVIDE NEW CONNECTION AS REQUIRED AND EXTEND EXISTING CIRCUITRY. FIELD VERIFY CONDITIONS AND EXTENT OF WORK.
2. SERVICE COLD DELI CASE RECEPTACLES, GFCI, WP, PROVIDED WITH CASE. COORDINATE REQUIREMENTS AND CONDUIT ROUTING WITH CASE INSTALLATION.
3. HOT CASE: 208V, 1PH, 19.5A.
4. EXISTING PANEL SCHEDULE IS INCORRECT. RECONNECT CIRCUITS TO RELOCATED EQUIPMENT. SHIFT EXISTING BREAKERS AS REQUIRED TO FIT NEW LOADS IN PANELS.
5. RECEPTACLE AND COMMUNICATION CONNECTION FOR DELI MONITOR MOUNTED IN CEILING TILE, COORDINATE EXACT LOCATION. CAT-5e COMMUNICATION CABLES TO BE PROVIDED BY OTHERS (MACRO).
6. ~~ELECTRICAL CONTRACTOR SHALL REPLACE SEAL TIGHT FLEXIBLE CONDUIT AND FITTINGS FOR D/B HOOD ON ROOF (SEAL-TITE TYPE FLEX IS SPECIFIED, USE PROPER METAL FITTINGS) IF EQUIPMENT TO BE REUSED AFTER REMODEL.~~
7. ~~RACK OVEN: 208V, 3PH, FLA=113A, MCA=145A.~~
8. ~~NEW EVAP COIL TO REPLACE EXISTING. RECONNECT TO EXISTING CIRCUIT AS REQUIRED.~~
9. TO RACK "A". SEE GENERAL NOTE #5.
10. TO RACK "B". SEE GENERAL NOTE #5.
11. EXISTING RECEPTACLE TO SERVE RELOCATED EQUIPMENT.
12. 10' HOT WING BAR: 208V, 3PH, 48A.

PANEL: B

LOCATION: DELI/BAKERY PREP
FED FROM: MDP-3
MOUNTING: FLUSH
VOLTAGE: 208Y/120V, 3-PH, 4-W
MAINS: 225A MLO
100% NEUTRAL BUS
* LOCK ON BREAKER
# SHUNT TRIP BREAKER

EMS LOAD	COND. SIZE	WIRE SIZE	BREAKER TRIP	BREAKER POLES	DESIGNATION	VOLT-AMPS	CIRCUIT #	PHASE LOAD (VOLT-AMPS) A	B	C	CIRCUIT #	VOLT-AMPS	DESIGNATION	BREAKER TRIP	BREAKER POLES	WIRE SIZE	COND. SIZE	EMS LOAD
7	1/2	12	15	1	3 DOOR FROZEN DELI LTS B-2	228	1	228			2		D/B COOLER EVAP FAN COIL	15	1			
	1/2	12	15	1	3 DOOR FROZEN DELI FANS B-2	180	3		180		4		D/B FREEZER HEAT TAPE & DOOR HTR	20	1			
	1/2	12	20	1	3 DOOR FROZEN DELI A/S B-2	384	5			384	6		COFFEE MAKER	20	1			
	1/2	12	20	1	BREAD SLICER	864	7	864			8		DELI/BAKERY RCPTS	20	1			
			20	1	DELI BAKERY RCPT		9		360		10	360	HOT CASE RCPTS	20	1	12	1/2	
	1/2	12	20	1	MANUAL SLICERS	840	11			1200	12	360	DELI/BAKERY MONITORS	20	1	12	1/2	
			15	1	SPARE		13	0			14		D/B HOOD SUPPLY FANS	20	1			
			15	1	SPARE		15		0		16		D/B HOOD EF	20	1			
			15	1	SPARE		17			0	18		D/B HOOD LTS & CONTROLS	20	1			
			20	2	SPARE		19	329			20	329	12'/8' BAKERY/DELI CASE LTS A-8	15	1	12	1/2	6
							21		173		22	173	12'/8' BAKERY/DELI CASE FANS A-8	15	1	12	1/2	
			20	1	SLICER		23			0	24		SPARE	20	1			
	1/2	12	20	1	SCALE	180	25	180			26		SPARE	15	1			
6	1/2	12	15	1	6'/6'/8' DELI CASE LTS A-7	286	27		286		28		SLICER	20	1			
	1/2	12	15	1	6'/6'/8' DELI CASE FANS A-7	478	29			478	30		SCALE	15	1			
			20	1	SPARE		31	0			32		SPARE	15	1			
			15	1	SPARE		33		0		34		DELI/BAKERY RCPTS	15	1			
			15	1	SPARE		35			0	36		SPARE	15	1			
			60	3	RTU-DB		37	0			38		SPARE	15	1			
							39		0		40		SCALE	20	1			
							41			0	42		FLY TRAP	20	1			
					TOTALS PER PHASE:			1601	999	2062			TOTAL CONNECTED LOAD (VA): 4662					

NOTES
1. BOLD INDICATES NEW WORK.
2. FOR CIRCUIT B-5, REPLACE EXISTING CIRCUIT BREAKER WITH NEW 20A/1P BREAKER. (CRESCENT POST-107)

PANEL: D

LOCATION: DELI/BAKERY PREP
FED FROM: MDP-3
MOUNTING: FLUSH
VOLTAGE: 208Y/120V, 3-PH, 4-W
MAINS: 400A MLO
100% NEUTRAL BUS
* LOCK ON BREAKER
# SHUNT TRIP BREAKER

EMS LOAD	COND. SIZE	WIRE SIZE	BREAKER TRIP	BREAKER POLES	DESIGNATION	VOLT-AMPS	CIRCUIT #	PHASE LOAD (VOLT-AMPS) A	B	C	CIRCUIT #	VOLT-AMPS	DESIGNATION	BREAKER TRIP	BREAKER POLES	WIRE SIZE	COND. SIZE	EMS LOAD
					SPACE		1	0			2		UNKNOWN	50	3			
					SPACE		3		0		4							
					SPACE		5			0	6							
					SHUNT		7	5764			8	5764	HOT WING BAR	60	3	6	1	
			3	50	PRESSURE FRYER		9		5764		10	5764				6		
							11			5764	12	5764				6		
							13	1800			14	1800	INDUCTION RANGE	20	1	12	1/2	
					SHUNT		15		0		16		SPARE	40	2			
			3	50	UNKNOWN		17			0	18							
							19	0			20		SPARE	20	1			
							21		0		22		COMBI OVEN	40	3			
	1/2	10	2	30	HOT CASE	2028	23			2028	24							
		10				2028	25	2028			26							
			2	20	ROTIS FAN		27		0		28		SHUNT					
							29			0	30		SPARE	20	1			
			1		SHUNT		31	0			32		SPARE	20	1			
			3	70	UNKNOWN		33		0		34		82 GALLON WATER HEATER	70	3			
							35			0	36							
							37	0			38							
			1	20	RACK OVEN CONTROL		39		0		40		SPARE	20	1			
			1	20	SPARE		41			0	42		SPARE	20	1			
					TOTALS PER PHASE:			9592	5764	7792			TOTAL CONNECTED LOAD (VA): 23148					

NOTES
1. BOLD INDICATES NEW WORK.

ALLIANCE ARCHITECTURE OF THE TRIAD
720 Coliseum Drive, Suite 112
Winston-Salem, NC 27106
Phone: 336-722-4447

PROFESSIONAL'S SEAL:
NORTH CAROLINA PROFESSIONAL ENGINEER SEAL 16375 CARL A.R. PAGE
08/29/2022
CORPORATE SEAL:

PAGE INTERWORKS, P.A.
ENGINEERS & CONSULTANTS
923 MAIN STREET, NORTH WILKESBORO, NC 28659
PHONE: 336-667-4225 FAX: 336-667-4332
NC - BUSINESS FIRM # C-1304 JUNE 30, 2023

REVISIONS
NO DATE REMARKS

FOOD LION
2110 Executive Drive, Salisbury, NC 28145
telephone: 704.633.8250
foodlion.com
Food Lion is an AHOLD DELHAIZE company.

FOOD LION REMODEL STORE #1657
4330 E. TENTH STREET
GREENVILLE, NC

PROJECT NO: 1657FLMK22
DATE: 08/29/2022
32 OF 40
E4.01
ENLARGED DELI/BAKERY ELECTRICAL PLAN
CHECKED: DOD DRAWN: DBD