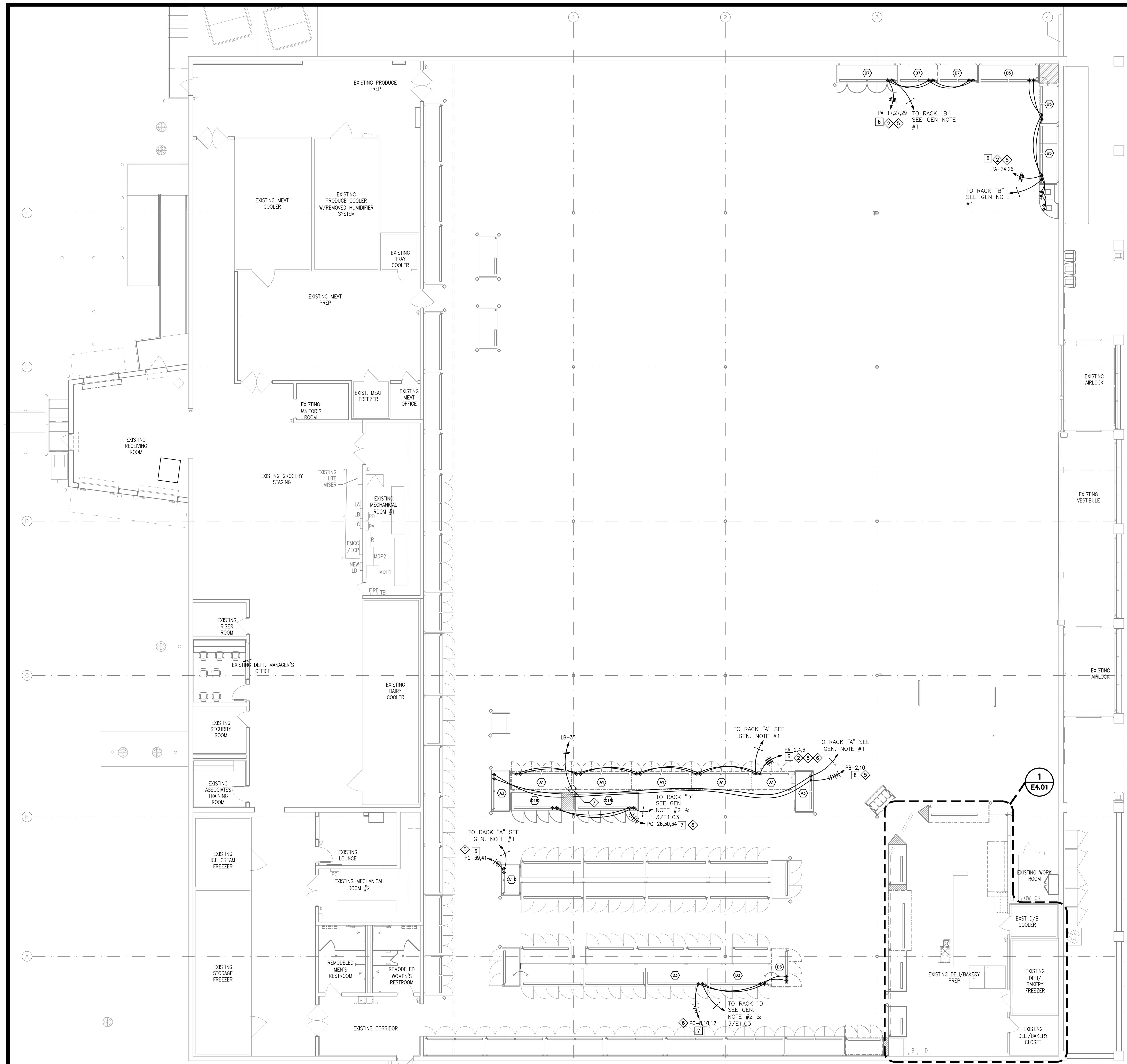

1 ELECTRICAL REFRIGERATION PLAN
E1.03 SCALE: 3/32" = 1'-0"

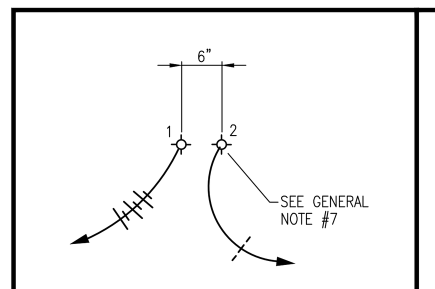

TYPICAL STUB-UP UNDER CASES

(1) POWER STUB-UP
(2) DEFROST/TEMP SENSOR STUB-UP

SEE 3/E1.03 FOR ADDITIONAL DETAIL

LEGEND

- ELECTRICAL STUB-UP
- DROP FROM CEILING
- SENSOR. SEE NOTES No. 8, 12
- XXX–XXX EVAPORATOR COIL
- MAGNETIC SWITCH
- (XX) REFRIGERATION CIRCUIT NUMBER
- REFRIGERATION CIRCUIT BREAK
- [#] EMS LOAD (VERIFY WITH SESCO REPRESENTATIVE, ARCHITECT AND CRESCENT REPORT FOR EXISTING LOADS)

CONTROL WIRING NOTES

1. (————) INDICATES FIELD WIRING BY THE ELECTRICAL CONTRACTOR.
2. KLIXONS ARE PROVIDED AND MOUNTED BY OTHERS.
3. SENSORS ARE PROVIDED BY OTHERS AND WIRED BY THE ELECTRICAL CONTRACTOR.

GENERAL NOTES:

1. MEDIUM TEMPERATURE CASES (PER CIRCUIT ELECTRICAL REQUIREMENTS AND COLOR CODES)
   - FANS: 12GA 1-BLACK, 1-WHITE, 1-BLACK/WHITE (NEUTRAL)
   - LIGHTS: 12GA 1-RED, 1- WHITE, 1-RED/WHITE (NEUTRAL), RUN THROUGH EMS LOAD #6
   - ANTI-SWEAT HEATERS: 10GA 1-BLUE, 1-WHITE, 1-BLUE/WHITE (NEUTRAL). FOR NEW OR RETROFITTED GLASS DOOR CASES ONLY. RUN THROUGH THE SWEATMISER PANEL. ONE CIRCUIT FOR DAIRY, ONE CIRCUIT FOR LUNCH MEAT AND ONE CIRCUIT FOR BEER. MARK NEUTRAL (BLUE/WHITE WIRE) WITH PROPER PANEL LETTER AND CIRCUIT NUMBER. THERE WILL BE A 4x4 JUNCTION BOX INSTALLED ON TOP OF THE CASES BY THE RETROFIT DOOR COMPANY THAT THE EC WILL RUN HIS WIRES TO. SEE ENVIRONMENTAL NOTES ON THIS SHEET.
   - 22GA 4-WIRE SHIELDED CABLE 1-BLACK AND 1-WHITE FOR CASE SENSOR, 1-RED AND 1-GREEN FOR SPARES.
2. LOW TEMPERATURE CASES (PER CIRCUIT ELECTRICAL REQUIREMENTS AND COLOR CODES)
   - FANS: 12GA 1-BLACK, 1-WHITE, 1-BLACK/WHITE (NEUTRAL)
   - LIGHTS: 12GA 1-RED, 1-WHITE, 1-RED/WHITE (NEUTRAL), RUN THROUGH EMS LOAD #6
   - ANTI-SWEAT HEATERS: 10GA 1-BLUE, 1-WHITE, 1-BLUE/WHITE (NEUTRAL). RUN THROUGH THE SWEATMISER PANEL. MARK NEUTRAL (BLUE/WHITE WIRE) WITH PROPER PANEL LETTER AND CIRCUIT NUMBER.
   - 22GA 4-WIRE SHIELDED CABLE 1-BLACK AND 1-WHITE FOR CASE SENSOR, 1-RED AND 1-GREEN FOR DEFROST TERMINATION.
3. MEDIUM TEMPERATURE WALK-IN COOLERS (PER CIRCUIT ELECTRICAL REQUIREMENTS AND COLOR CODES)
   - FANS: 12GA 1-BLACK, 1-WHITE
   - LIGHTS: 12GA 1-RED, 1-WHITE, RUN THROUGH EMS LOAD#1
   - 22GA 4-WIRE SHIELDED CABLE 1-BLACK AND 1-WHITE FOR CASE SENSOR, 1-RED AND 1-GREEN FOR SPARES.
4. LOW TEMPERATURE WALK-IN FREEZERS (PER CIRCUIT ELECTRICAL REQUIREMENTS AND COLOR CODES)
   - FANS: 12GA 2-BLUE (FAN POWER COMES FROM THE LOW-TEMP RACK EVAPORATOR CONTACTOR)
   - LIGHTS: 12GA 1-RED, 1-WHITE, RUN THROUGH EMS LOAD #1
   - 22GA 6-WIRE SHIELDED CABLE 1-BLACK AND 1-WHITE FOR CASE SENSOR, 1-RED AND 1-GREEN FOR TERMINATION, 1-BROWN AND 1-BLUE FOR MAGNETIC DOOR SWITCH.
5. ALL CONTROL WIRES FOR CASES AND WALK-INS SHALL TERMINATE AT THE ASSOCIATED REFRIGERATION RACK OR REMOTE MANIFOLD.
6. THE EC SHALL MOUNT THE DOOR SWITCH PROVIDED BY THE RACK MFG (IN RC PARTS). EC SHALL PROVIDE WIRE AND CONDUIT FROM FREEZER TO RACK CONTROL PANEL. COORDINATE WITH THE FOOD LION REFRIGERATION REPRESENTATIVE.
7. ALL CONDUIT FOR REFRIGERATED CASES SHALL BE 1". ENTIRE SALES AREA STUB-UP TO 1" OF DIMENSION.
8. DIMENSIONS PULLED FROM INSIDE FACE OF MASONRY WALL UNLESS OTHERWISE INDICATED ON PLANS.
9. ALL WIRING SHALL BE DONE IN ACCORDANCE WITH N.E.C. STANDARDS AND WITH FOOD LION STANDARDS. INSTALL USING PROPER WORKMANSHIP. EC IS TO MAKE SURE THAT NO MC OR BX OR ANY OTHER FLEX CABLES ARE USED UNLESS OTHERWISE NOTED. MC OR BX CAN ONLY BE USED IN SHORT RUNS FOR LIGHTING FEEDS. EMT MUST BE USED TO CONNECT PANEL TO JUNCTION BOX AND HAVE COMPRESSION-TYPE FITTINGS. SEE SPECIFICATIONS FOR STANDARD PRACTICES.
10. RUN A SEPARATE 3/4" CONDUIT FROM EACH REFRIGERATION CONTROLLER TO ITS RESPECTIVE CONDENSER, CONTAINING (1) 4-WIRE SHIELDED CABLE FOR COMMUNICATION. ONLY SHIELDED CABLES SHALL BE RUN IN THIS CONDUIT.
11. ALL WIRE SHALL BE STRANDED FOR CONTROLS AND SOLID FOR BRANCH CIRCUITS.
12. ANTI-SWEAT SENSOR MOUNTED ON CHASE/COLUMN ABOVE FROZEN FOOD CASE LINE-UP BY ELECTRICAL CONTRACTOR. COORDINATE EXACT LOCATION WITH FOOD LION REPRESENTATIVE. SEE ENVIRONMENTAL CONTROL NOTES THIS SHEET.
13. PROVIDE SHIELDED CABLE LABELED AS REQUIRED FOR ALL REFRIGERATED CASES. THIS INCLUDES NEW, EXISTING-RELOCATED, AND EXISTING TO REMAIN CASES. COOLERS AND FREEZERS WILL BE INCLUDED IN THIS PROCESS IF NO TEMPERATURE SENSORS EXIST. SEE GENERAL NOTES #1-4. VERIFY EXTENT OF WORK IN FIELD. EACH REFRIGERATION CIRCUIT WILL HAVE ITS OWN ELECTRICAL CIRCUIT. AS AN EXAMPLE, IF ONE REFRIGERATION CIRCUIT IS REMOVED AND IS REPLACED BY TWO REFRIGERATION CIRCUITS AN ADDITIONAL ELECTRICAL CIRCUIT WILL BE REQUIRED. THIS CIRCUIT WILL HAVE LIGHTS AND FANS SEPARATED AND ANTI-SWEAT RUN THROUGH THE ANTI-SWEAT CONTROLLER FOR ALL NEW AND RELOCATED GLASS DOOR FROZEN FOOD CASES.
14. INSTALL A 6" X 6" X 36" WIRING TROUGH WHERE THE CABLES ENTER THE MECHANICAL ROOM, CONDUIT FROM THE TROUGH TO THE RESPECTIVE RACK/HEADER, LABELING BOTH ENDS OF EACH CABLE WITH CIRCUIT DESIGNATION. REFRIGERATION CONTRACTOR SHALL BE RESPONSIBLE FOR TERMINATING THE SENSOR CABLES TO THE RACK/HEADER AND CASE/COOLERS.
    IMPORTANT NOTE: ELECTRICAL CONTRACTOR SHALL RUN SENSOR CABLES THE NIGHT OF THE CASE MOVES.
15. BIDDING ELECTRICAL CONTRACTORS SHALL BE RESPONSIBLE FOR OBTAINING A COPY OF THE REFRIGERATION INSTALLATION SCOPE OF WORK & SUMMARY TO VERIFY & INCLUDE ANY NEW OR RESIZED BREAKERS. NOTE: NEW LOW TEMP RACK PROVIDE EVAPORATOR POWER TO WALK-IN FREEZERS. INCLUDE RELOCATING EVAPORATOR CIRCUITS WHEN A NEW RACK IS INDICATED. WHEN NEW E2E CONTROLLERS ARE INDICATED IN THE REFRIGERATION SCOPE OF WORK, PROVIDE 3/4" CONDUIT FROM ENVIRONMENTAL CONTROL PANEL.
    -TO A T-11 BOX AT RECLAIM WATER HEATERS, INCLUDE 4 WIRE SHIELDED.
    -TO REFRIGERATION RACKS, DAISY CHAIN RACK TO RACK, INCLUDE (2) 4 WIRE SHIELDED CABLE FOR COM B & C ON CONTROLLERS. IN NEW RACKS PROVIDE 3/4" CONDUIT FROM ANY NEW RACKS TO ROOFTOP CONDENSER (2) 14'S AND (4) WIRE SHIELDED.
16. ALL NEW AND RELOCATED CASE WORK REQUIRES A SEPARATE NEUTRAL FOR EACH: LIGHTS, FANS & ANTI-SWEAT HEATERS. NO DOUBLE POLE BREAKERS ARE ALLOWED FOR SHARED NEUTRALS.

SENSORS

17. ALL NEW AND EXISTING LOW VOLTAGE CABLING SHALL BE PROPERLY SUPPORTED AND NEATLY SECURED. ALL NEW CABLES SHALL BE IN CONDUIT VERTICALLY AND SECURED NEATLY TO STEEL OVERHEAD. ANY NEW CABLING TO BE RUN PARALLEL & PERPENDICULAR TO EXTERIOR WALLS. ALL ABANDONED CABLES TO BE REMOVED.
18. REFRIGERATION SENSOR WIRING MAY BE FREE WIRED AND TIE-WRAPPED TO THE STRUCTURE ABOVE LAY-IN CEILINGS AND IN EXPOSED CEILING BACK ROOM AREAS, IF ALLOWED BY CODE (UNLESS CALLED OUT TO BE UNDER SLAB). SENSOR WIRING IN EXPOSED STRUCTURE CEILINGS (REMODELS) SHALL BE RUN IN EMT CONDUIT. IN MACHINE ROOMS, SENSOR WIRING SHALL BE INSTALLED IN A 6" X 6" X 36" TROUGH WHERE THE CABLES ENTER THE ROOM, IN EMT CONDUIT FROM THE TROUGH TO ABOVE THE RESPECTIVE RACK/HEADER, THEN IN FLEXIBLE CONDUIT TO THE RACK/HEADER, LABELING BOTH ENDS OF EACH CABLE WITH CIRCUIT DESIGNATION. REFRIGERATION CONTRACTOR TO TERMINATE THE SENSOR CABLES TO THE RACK/HEADER AND CASES/COOLERS.
19. REFRIGERATION CONTRACTOR SHALL SUPPLY AND INSTALL SOLENOID VALVE AT THE RACK FOR THE GARDEN COOLER & PRODUCE PREP EVAPORATOR COILS.
20. RELOCATE COLUMN MOUNTED SENSORS FOR ANTI-SWEATS WHEN FROZEN FOOD CASES ARE REPOSITIONED IN THE SALES AREA.
21. THE ELECTRICAL CONTRACTOR WILL REUSE EXISTING STUB-UPS FOR NEW CASES WHERE POSSIBLE. IN THE EVENT THERE'S NO EXISTING STUB UP HE WILL COORDINATE WITH THE FOOD LION CONSTRUCTION MANAGER RUNNING WIRE OVERHEAD, (REFER TO NOTES #1-4). FIELD VERIFY EXTENT OF WORK REQUIRED PRIOR TO BID.
22. THE ELECTRICAL CONTRACTOR TO PROPERLY SEAL ALL CONDUITS ENTERING WALK-IN COOLERS AND FREEZERS TO PREVENT MOISTURE. WHERE A CONDUIT PASSES THROUGH AN INSULATED PANEL AND INTO A REFRIGERATED SPACE; THAT CONDUIT INTERIOR AND PENETRATION SHALL BE SEALED TO PREVENT MOISTURE TRANSFER AND ACCUMULATION. ANY MOISTURE ACCUMULATION / CONDENSATION OR ICE PRESENT WITHIN A REFRIGERATION SPACE, CONDUIT BODY, ELECTRICAL BOX OR FIXTURES SHALL BE REMOVED WHILE ENTRY POINT IS PROPERLY REPAIRED / SEALED.
23. GENERAL CONTRACTOR SHALL PAINT ALL EXPOSED REFRIGERATION LINES IN MEAT PREP, GARDEN COOLER, AND PRODUCE PREP TO MATCH WALL COLOR.

REFRIGERATION PLAN KEY NOTES ⟨X⟩

1. ~~NEW EVAP COIL TO REPLACE EXISTING. RECONNECT TO EXISTING CIRCUIT AS REQUIRED.~~
2. EXTEND AND REUSE CIRCUITS MADE SPARE BY DEMOLITION OF EXISTING/RELOCATED REFRIGERATED CASES. VERIFY LIGHTING CIRCUITS (CONTROLLED BY EMS) ARE RECONNECTED TO LIGHTING LOADS AND ANTI-SWEAT CIRCUITS (CONTROLLED BY ANTI-SWEAT SYSTEM) ARE RECONNECTED TO ANTI-SWEAT LOADS. REUSE EXISTING UNDERSLAB STUBS WHERE POSSIBLE. REUSE EXISTING SENSOR CABLING WHERE POSSIBLE. SEE GENERAL NOTE #4. COORDINATE REQUIREMENTS WITH THE REFRIGERATION CONTRACTOR. RUN CONDUITS OVERHEAD AND DOWN IN WALL OR THROUGH FALSE COLUMN WITH REFRIGERATION PIPING WHERE EXISTING UNDERSLAB STUBS ARE NOT REUSED. FIELD VERIFY EXISTING CONDITIONS AND EXTENT OF WORK. CASES CIRCUITS ARE NOT ALLOWED TO SHARE NEUTRALS.
3. ~~MOUNT RECEPTACLE FLUSH TO BASE OF REFRIGERATED CASE. COORDINATE REQUIREMENTS AND COUNDUIT ROUTING WITH CASE INSTALLATION.~~
4. ~~WHERE TOTAL CASE LINEUP LOAD EXCEEDS 16AMPS (LIGHTING) OR 24AMPS (ANTI SWEATS), SPLIT BETWEEN (2) CIRCUITS AS INDICATED. DIVIDE CASE LINEUP AS EVENLY AS POSSIBLE. IF EXISTING CASE LIGHTING CIRCUITRY IS FED FROM A BREAKER LARGER THAN 20AMP OR ANTI-SWEATS CIRCUITRY IS FED FROM A BREAKER LARGER THAN 30AMP, REPLACE THE EXISTING BREAKER WITH A NEW 20AMP (LIGHTING) OR 30AMP (ANTI-SWEAT) TRIP BREAKER OF SIMILAR TYPE AND AIC RATING. FIELD VERIFY EXISTING CONDITIONS AND EXTENT OF WORK.~~
5. CASE LIGHTING AND UPLIGHTING CIRCUITS TO BE CONTROLLED BY ENERGY MANAGEMENT SYSTEM (LOADS #6, #7 AND #14, SEE E6.04). PROVIDE CONTACTORS IN ENCLOSURE IF REQUIRED. FIELD VERIFY EXISTING.
6. CASE ANTI-SWEAT CIRCUITS TO BE CONTROLLED BY SWEAT-MISER SYSTEM. FIELD VERIFY EXISTING CONDITIONS. PROVIDE AND INSTALL ALL EQUIPMENT NECESSARY. COORDINATE REQUIREMENTS WITH THE REFRIGERATION CONTRACTOR.
7. ELECTRICAL CONTRACTOR TO VERIFY DEDICATED CIRCUIT ON TOP OF BACK-TO-BACK CASE LINE-UP FOR PLENUM FANS AND PROPERLY LABEL IN PANEL SCHEDULE. IF NO DEDICATED CIRCUIT IS PRESENT, ELECTRICAL CONTRACTOR TO PULL NEW 20A DEDICATED CIRCUIT TO CASE LINE-UP FOR FAN POWER. INSTALLED BY REFRIGERATION CONTRACTOR, WIRED BY ELECTRICAL CONTRACTOR.
8. ~~JUNCTION BOX FOR DOOR ANTI-SWEAT HEATER CIRCUIT. MOUNT ON TOP OF CASE. COORDINATE LOCATION WITH REFRIGERATION CONTRACTOR.~~

ENVIRONMENTAL CONTROL PANEL CONDUIT SYSTEM

= SENSOR (TEMP./HUMIDITY) HANDY BOX MTD.

1. ENTIRE CONDUIT SYSTEM FOR ENVIRONMENTAL CONTROL PANEL SHALL BE SUPPLIED BY THE ELECTRICAL CONTRACTOR (WITH PULL STRINGS). ALL WIRING AND TERMINATIONS FOR THE ENVIRONMENTAL CONTROL PANEL SHALL BE COMPLETED BY THE MECHANICAL CONTRACTOR. ALL WIRING AND TERMINATIONS FOR THE ENERGY MANAGEMENT PANEL SHALL BE COMPLETED BY THE ELECTRICAL CONTRACTOR.
2. ALL CONDUIT FOR ENVIRONMENTAL CONTROL SYSTEM SHALL BE 3/4". DO NOT COMBINE SENSOR AND 120 VOLT CONTROL (VERIFIED BY MECHANICAL CONTRACTOR).
3. ALL MECHANICAL EQUIPMENT SHALL BE FLEXED TO A TERMINATING JUNCTION BOX WITHIN REASONABLE WORKING DISTANCE OF EQUIPMENT.
4. CONDUITS FROM 6"x6"x36" TROUGH TO:
   a. SMOKE DETECTORS (SERIES BETWEEN ALL SMOKE DETECTORS)
   b. AHU MOTOR STARTER & AIR PRESSURE SWITCH
   c. A/C SOLENOIDS AND OUTSIDE AIR DAMPER MOTOR
   d. A/C CONDENSING UNIT ON ROOF. SEAL TITE 3'-0" MAXIMUM TO EQUIPMENT
   e. PRODUCE PREP DAMPER MOTOR, SENSOR AND SOLENOID VALVES
   f. HEAT RECLAIM SOLENOID VALVE
   g. DUCT HEATER #1 (AHU #1)
   h. DUCT HEATER #2 (AHU #2)
   i. SALES FLOOR AND FRONT DOOR SENSORS
   j. MAIN AHU DISCHARGE AIR SENSOR LOCATION
   k. MECHANICAL ROOM & GROCERY STAGING SENSORS
   l. RTU-1 & RTU-DB.

NOTE:
INSTALL 6-WIRE SHIELDED CABLE AS FOLLOWS:
INSTALL A RED & GREEN WIRE FOR DEFROST TERMINATION.
INSTALL A BLUE & BROWN WIRE TO THE MAGNETIC SWITCH.
INSTALL A BLACK & WHITE FOR TEMPERATURE SENSOR.
INSTALL 2 #12 AWG BLUE WIRES FOR POWER & FAN CONTROLS
* WIRE CONTROLS IN SERIES AS SHOWN (IF REQUIRED)

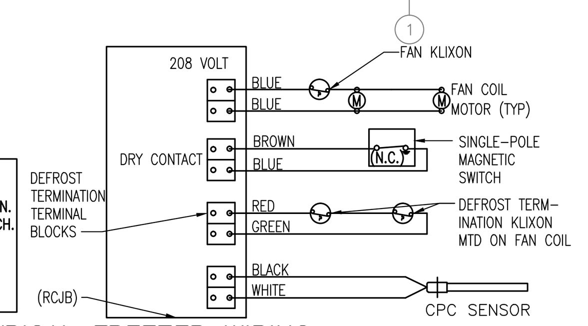

2 TYPICAL FREEZER WIRING
E1.03 NOT TO SCALE

NOTES:
CONNECT CLOSE ON RISE TERMINATION CONTROL BETWEEN TERMINAL BLOCKS. IF MORE THAN ONE CASE, WIRE CONTROLS IN SERIES.

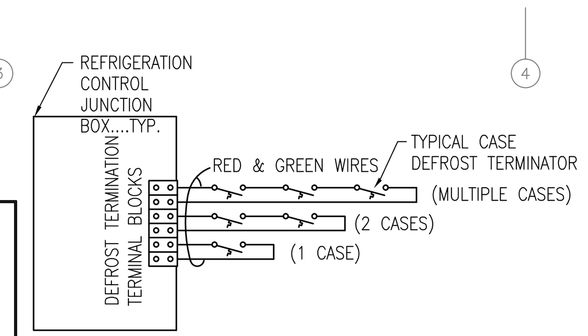

3 TYPICAL CASE CONTROL WIRING
E1.03 FOR HOT GAS CONTROL WIRE

ALLIANCE ARCHITECTURE OF THE TRIAD
720 Coliseum Drive, Suite 112
Winston-Salem, NC 27106
Phone: 336-722-4447

PROFESSIONAL'S SEAL:

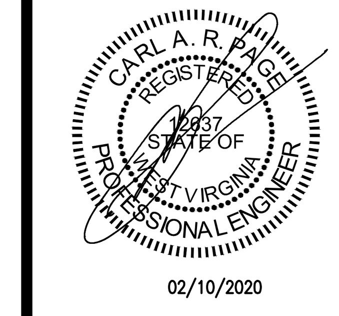

02/10/2020

CORPORATE SEAL:

PAGE INTERWORKS, P.A.
ENGINEERS & CONSULTANTS
923 MAIN STREET, NORTH WILKESBORO, NC 28659
PHONE: 336-667-4225 FAX: 336-667-4332
WV - COA C01023-00
DECEMBER 31, 2021

REVISIONS

NO	DATE	REMARKS
1	00/00/00	COMMENTS

END

FOOD LION
2110 Executive Drive, Salisbury, NC 28145
telephone: 704.633.8250
foodlion.com
Food Lion is an AHOLD DELHAIZE company.

FOOD LION REMODEL STORE #807
70 MORGAN SQ, SUITE 1
BERKELEY SPRINGS, WV

PROJECT NO: 0807FLMK20
DATE: 02/11/2020
38 OF 48
E1.03
REFRIGERATION ELECTRICAL PLAN
CHECKED: DOD DRAWN: DFH