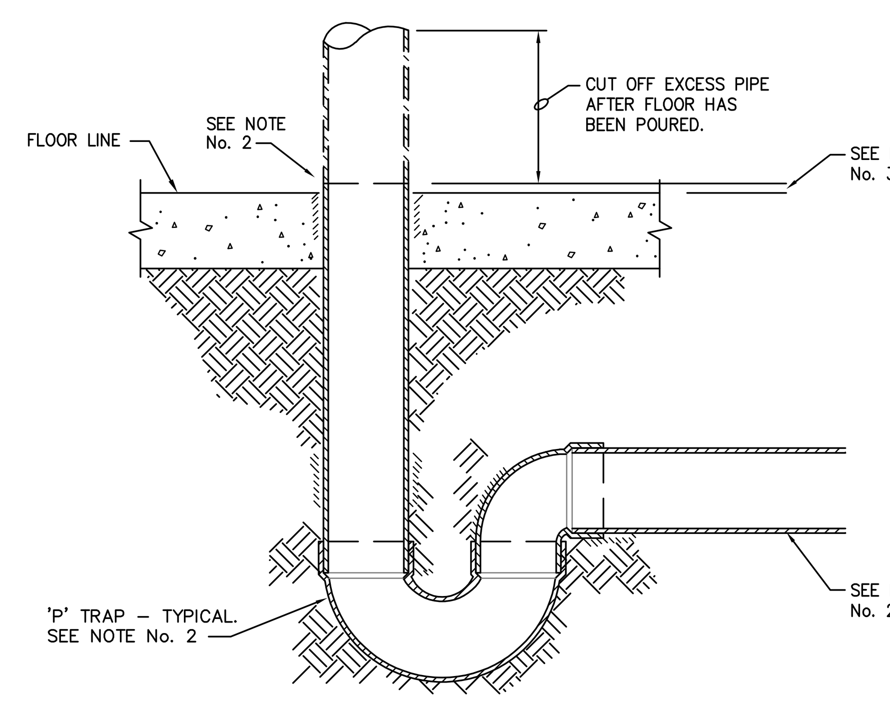

GENERAL NOTES :

1. REFER TO BUILDING SPECIFICATION SECTION 22 13 00 FOR APPROVED PIPING MATERIAL.
2. REFER TO PLUMBING PLAN FOR LOCATIONS AND SIZES OF DRAINS AND PIPING.
3. TYPICALLY 1" BUT PREFERABLY 1/2" IF PERMITTED BY LOCAL PLUMBING INSPECTOR TO FACILITATE CONDENSATE DRAIN INSTALLATION.

CONDENSATE DRAIN DETAIL	DATE : 11/15/17 DRAWN : ZAW
MASTER SPECIFICATION DETAIL	PSD-1

NOTES :

1. UNIT TO BE FURNISHED BY KROGER AND INSTALLED BY CONTRACTOR. SEE SPECS.
2. FOR DRAIN LINES REFER TO BUILDING SPECIFICATION SECTION 22 13 00 FOR APPROVED PIPING MATERIAL.
3. FINAL PLUMBING CONNECTIONS SHALL BE MADE BY THE PLUMBING CONTRACTOR
4. SEE PLUMBING PLAN FOR LOCATIONS OF DRAINS.
5. 2" MINIMUM AIR GAP OR GREATER WHEN REQUIRED BY LOCAL PLUMBING CODE OR LOCAL HEALTH REGULATIONS.

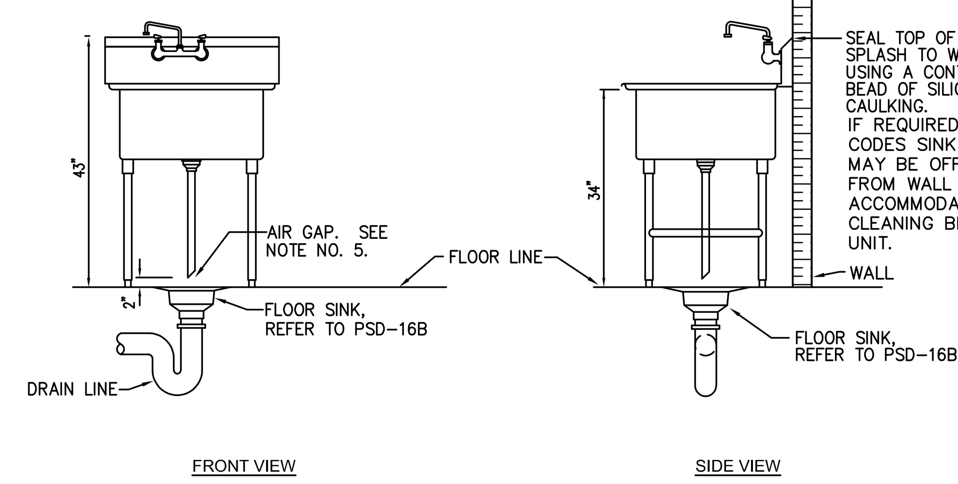

1-COMPARTMENT SINK	DATE : 11/15/17 DRAWN : ZAW
MASTER SPECIFICATION DETAIL	PSD-5A

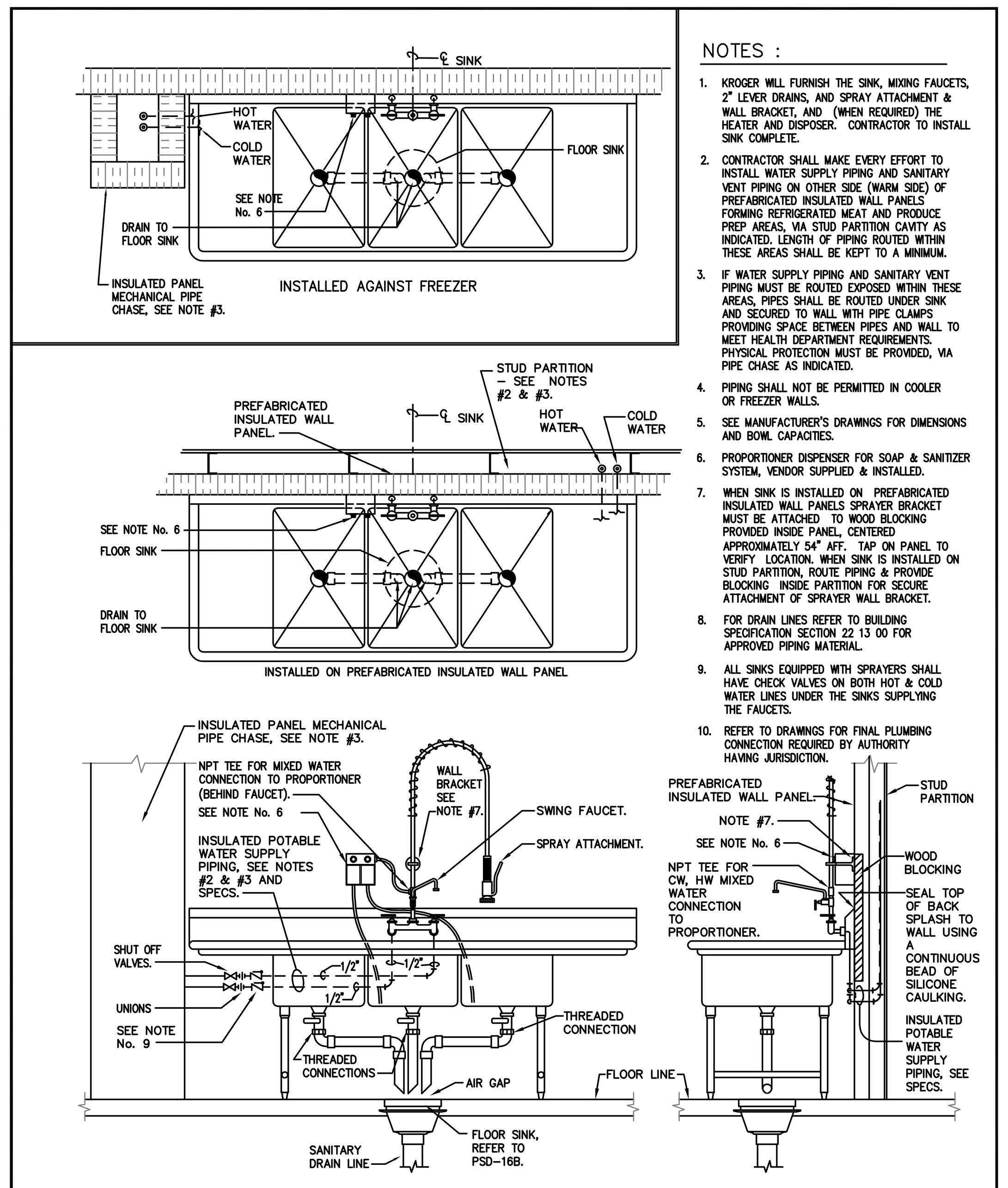

NOTES :

1. KROGER WILL FURNISH THE SINK, MIXING FAUCETS, 2" LEVER DRAINS, AND SPRAY ATTACHMENT & WALL BRACKET, AND (WHEN REQUIRED) THE HEATER AND DISPOSER. CONTRACTOR TO INSTALL SINK COMPLETE.
2. CONTRACTOR SHALL MAKE EVERY EFFORT TO INSTALL WATER SUPPLY PIPING AND SANITARY VENT PIPING ON OTHER SIDE (WARM SIDE) OF PREFABRICATED INSULATED WALL PANELS FORMING REFRIGERATED MEAT AND PRODUCE PREP AREAS, VIA STUD PARTITION CAVITY AS INDICATED. LENGTH OF PIPING ROUTED WITHIN THESE AREAS SHALL BE KEPT TO A MINIMUM.
3. IF WATER SUPPLY PIPING AND SANITARY VENT PIPING MUST BE ROUTED EXPOSED WITHIN THESE AREAS, PIPES SHALL BE ROUTED UNDER SINK AND SECURED TO WALL WITH PIPE CLAMPS PROVIDING SPACE BETWEEN PIPES AND WALL TO MEET HEALTH DEPARTMENT REQUIREMENTS. PHYSICAL PROTECTION MUST BE PROVIDED, VIA PIPE CHASE AS INDICATED.
4. PIPING SHALL NOT BE PERMITTED IN COOLER OR FREEZER WALLS.
5. SEE MANUFACTURER'S DRAWINGS FOR DIMENSIONS AND BOWL CAPACITIES.
6. PROPORTIONER DISPENSER FOR SOAP & SANITIZER SYSTEM, VENDOR SUPPLIED & INSTALLED.
7. WHEN SINK IS INSTALLED ON PREFABRICATED INSULATED WALL PANELS SPRAYER BRACKET MUST BE ATTACHED TO WOOD BLOCKING PROVIDED INSIDE PANEL, CENTERED APPROXIMATELY 54" AFF. TAP ON PANEL TO VERIFY LOCATION. WHEN SINK IS INSTALLED ON STUD PARTITION, ROUTE PIPING & PROVIDE BLOCKING INSIDE PARTITION FOR SECURE ATTACHMENT OF SPRAYER WALL BRACKET.
8. FOR DRAIN LINES REFER TO BUILDING SPECIFICATION SECTION 22 13 00 FOR APPROVED PIPING MATERIAL.
9. ALL SINKS EQUIPPED WITH SPRAYERS SHALL HAVE CHECK VALVES ON BOTH HOT & COLD WATER LINES UNDER THE SINKS SUPPLYING THE FAUCETS.
10. REFER TO DRAWINGS FOR FINAL PLUMBING CONNECTION REQUIRED BY AUTHORITY HAVING JURISDICTION.

SIZES/CAPACITIES:

PL3M–7 = 48" x 20", 6.7 GALLONS/BOWL.
PL3–18 = 72" x 24 1/2", 11.8 GALLONS/BOWL.
PL3–20 = 100" x 33 1/2", 29.1 GALLONS/BOWL.

3-COMP UTENSIL WASHING SINK	DATE : 3/19/19 DRAWN : ZAW
MASTER SPECIFICATION DETAIL	PSD-7

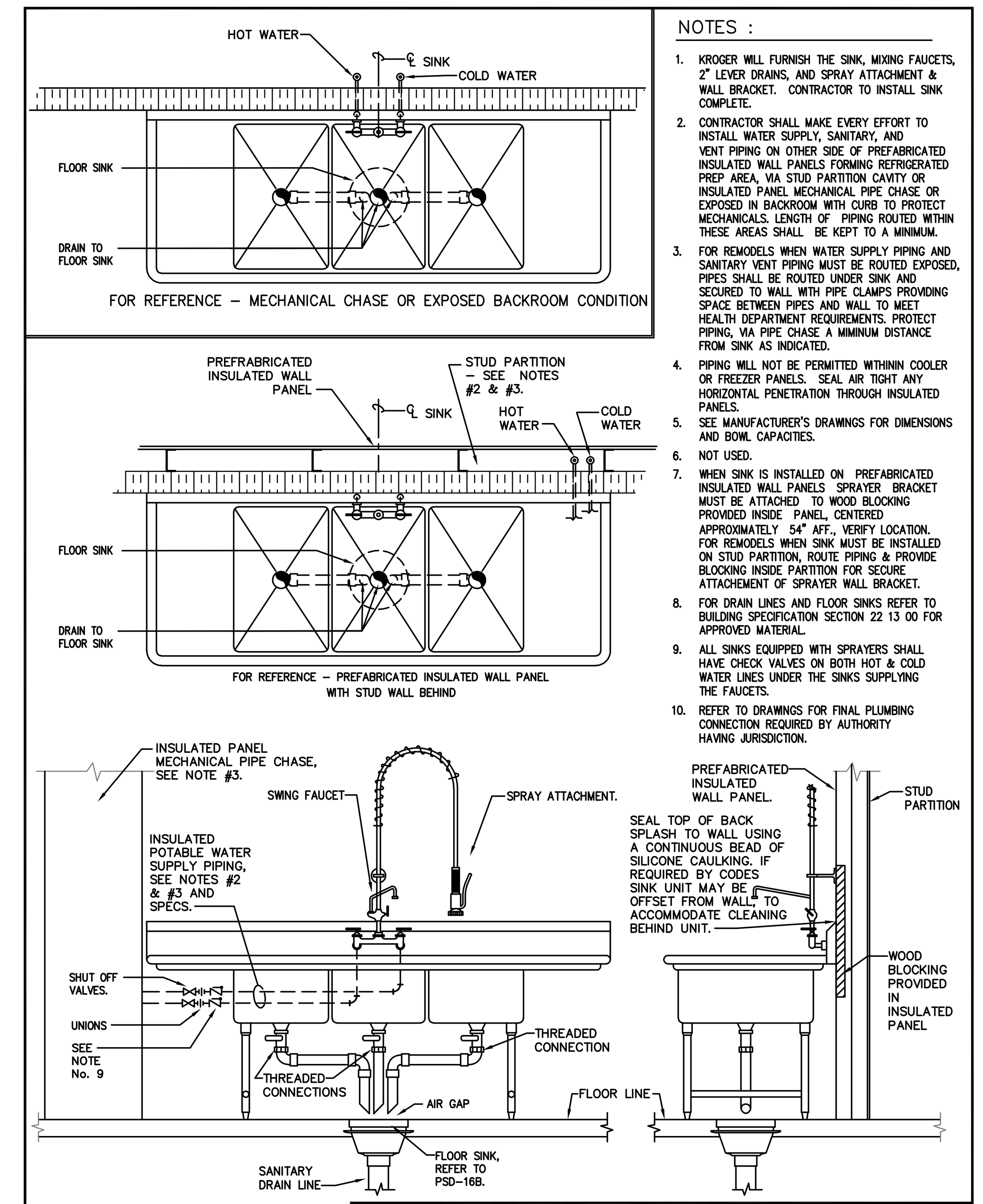

NOTES :

1. KROGER WILL FURNISH THE SINK, MIXING FAUCETS, 2" LEVER DRAINS, AND SPRAY ATTACHMENT & WALL BRACKET. CONTRACTOR TO INSTALL SINK COMPLETE.
2. CONTRACTOR SHALL MAKE EVERY EFFORT TO INSTALL WATER SUPPLY, SANITARY, AND VENT PIPING ON OTHER SIDE OF PREFABRICATED INSULATED WALL PANELS FORMING REFRIGERATED PREP AREA, VIA STUD PARTITION CAVITY OR INSULATED PANEL MECHANICAL PIPE CHASE OR EXPOSED IN BACKROOM WITH CURB TO PROTECT MECHANICALS. LENGTH OF PIPING ROUTED WITHIN THESE AREAS SHALL BE KEPT TO A MINIMUM.
3. FOR REMODELS WHEN WATER SUPPLY PIPING AND SANITARY VENT PIPING MUST BE ROUTED EXPOSED, PIPES SHALL BE ROUTED UNDER SINK AND SECURED TO WALL WITH PIPE CLAMPS PROVIDING SPACE BETWEEN PIPES AND WALL TO MEET HEALTH DEPARTMENT REQUIREMENTS. PROTECT PIPING, VIA PIPE CHASE A MIMINUM DISTANCE FROM SINK AS INDICATED.
4. PIPING WILL NOT BE PERMITTED WITHININ COOLER OR FREEZER PANELS. SEAL AIR TIGHT ANY HORIZONTAL PENETRATION THROUGH INSULATED PANELS.
5. SEE MANUFACTURER'S DRAWINGS FOR DIMENSIONS AND BOWL CAPACITES.
6. NOT USED.
7. WHEN SINK IS INSTALLED ON PREFABRICATED INSULATED WALL PANELS SPRAYER BRACKET MUST BE ATTACHED TO WOOD BLOCKING PROVIDED INSIDE PANEL, CENTERED APPROXIMATELY 54" AFF., VERIFY LOCATION. FOR REMODELS WHEN SINK MUST BE INSTALLED ON STUD PARTITION, ROUTE PIPING & PROVIDE BLOCKING INSIDE PARTITION FOR SECURE ATTACHEMENT OF SPRAYER WALL BRACKET.
8. FOR DRAIN LINES AND FLOOR SINKS REFER TO BUILDING SPECIFICATION SECTION 22 13 00 FOR APPROVED MATERIAL.
9. ALL SINKS EQUIPPED WITH SPRAYERS SHALL HAVE CHECK VALVES ON BOTH HOT & COLD WATER LINES UNDER THE SINKS SUPPLYING THE FAUCETS.
10. REFER TO DRAWINGS FOR FINAL PLUMBING CONNECTION REQUIRED BY AUTHORITY HAVING JURISDICTION.

3-COMP CONDITIONING SINK FOR FOOD PREP	DATE : 3/19/19 DRAWN : ZAW
MASTER SPECIFICATION DETAIL	PSD-7A

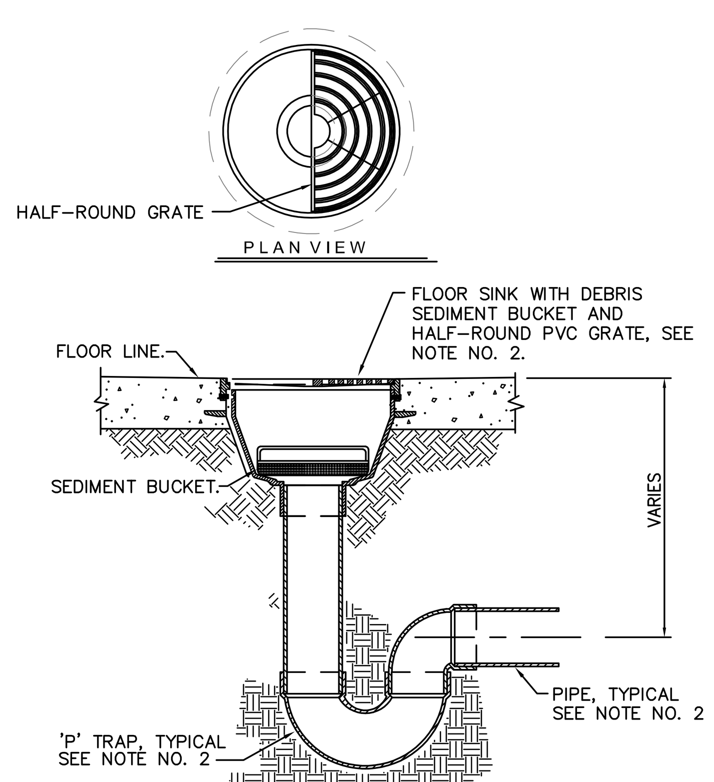

INTENDED USE :

MULTI PURPOSE UNDER CABINET (I.E. STARBUCKS)
REFRIGERATED CASE FRONT DRAIN (WHERE REQUIRED BY CODE)

GENERAL NOTES :

1. REFER TO BUILDING SPECIFICATION SECTION 22 13 00 FOR APPROVED PIPING MATERIAL.
2. REFER TO PLUMBING PLAN FOR LOCATIONS AND SIZES OF DRAINS.

FD-4

FLOOR SINK WITH DEBRIS BUCKET	DATE : 3/13/12 DRAWN : ZAW
MASTER SPECIFICATION DETAIL	PSD-16B

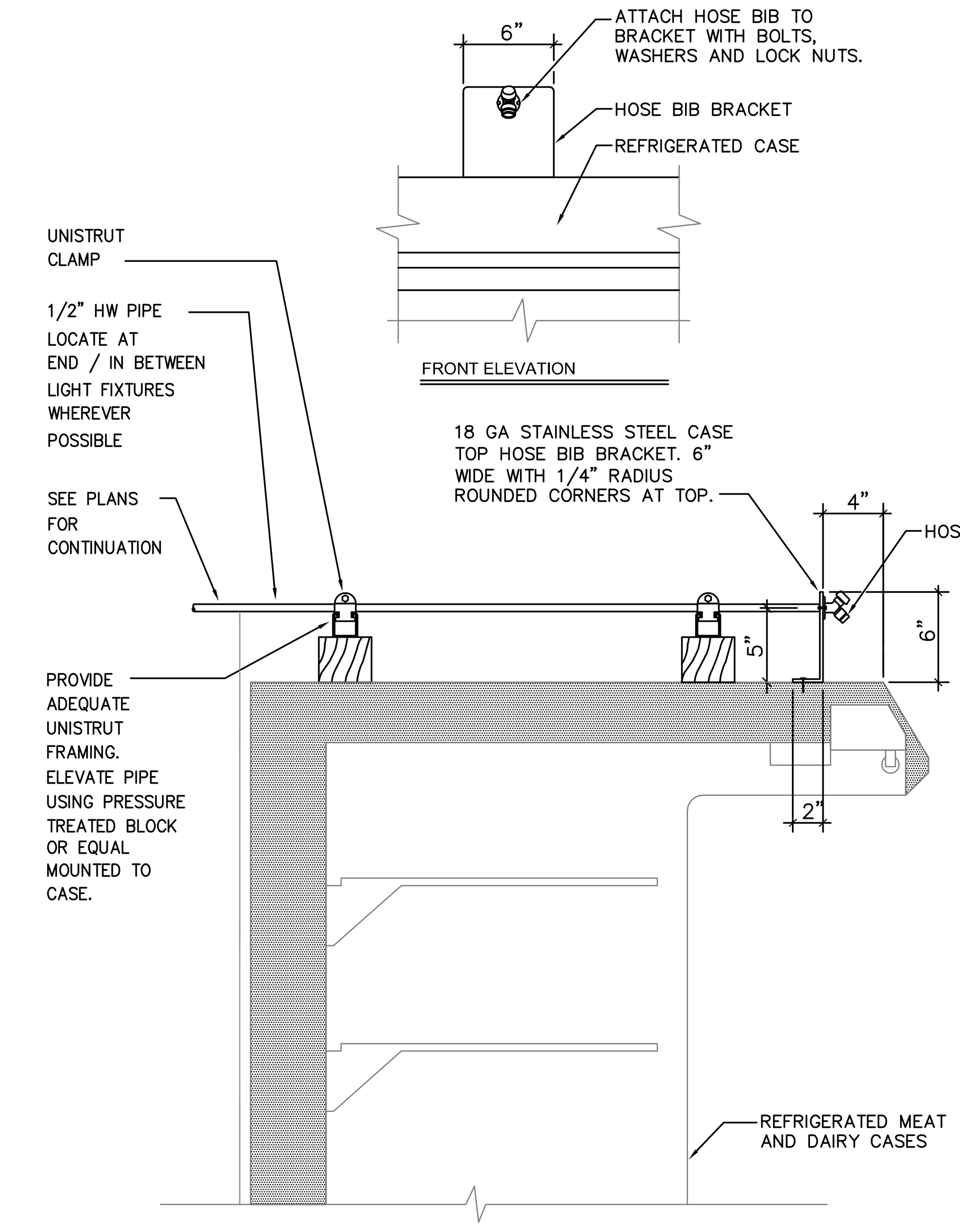

COORDINATE WATER LINE WITH ANY REFRIGERATION LINES LOCATED ON TOP OF CASE.

HOSE BIB LOCATION AT REFRIGERATED CASE	DATE : 3/31/17 DRAWN : ZAW
MASTER SPECIFICATION DETAIL	PSD-21

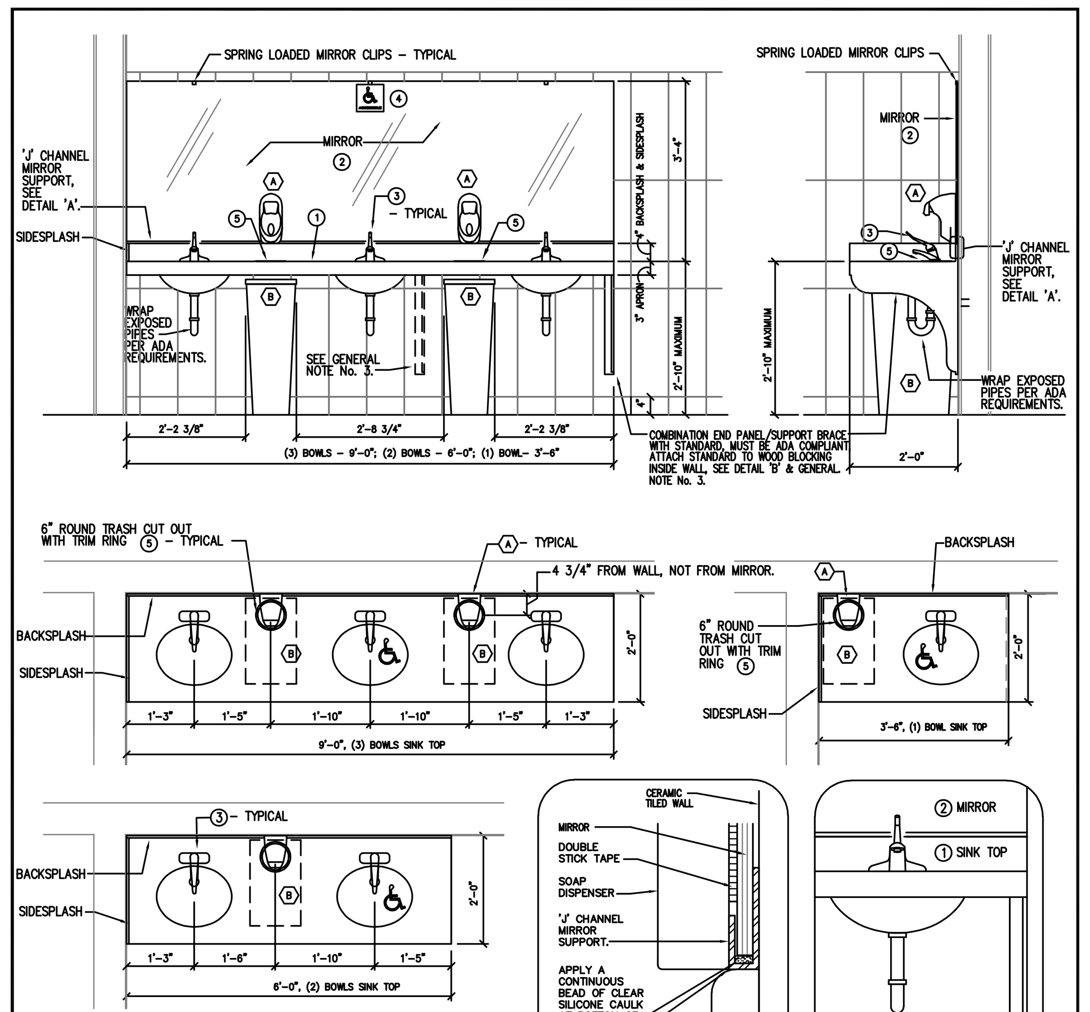

KROGER SUPPLIED & CONTRACTOR INSTALLED EQUIPMENT:

- (A) SOAP DISPENSER (5" WIDE X 7 1/8" DEEP X 11" HIGH). CONTRACTOR TO MOUNT SOAP DISPENSER ON MIRROR WITH DOUBLE STICK TAPE AS LOW AS POSSIBLE CENTERED OVER TRASH CUT OUT RING.
- (B) TRASH RECEPTACLE (11 1/4" WIDE x 19" DEEP x 30" HIGH – BROWN).

CONTRACTOR & FABRICATOR SUPPLIED & INSTALLED EQUIPMENT:

1. SOLID SURFACE SINK TOP WITH INTEGRAL SEAMLESS CONSTRUCTED 16" x 13" (NOMINAL INSIDE) SINK BOWLS, SIZE MAY VARY PER MANUF., APRON, BACKSPLASH, SIDESPLASH (WHERE NEEDED), COMBINATION END PANEL/SUPPORT BRACE WITH WALL STANDARD, & 6" ROUND TRASH CUTOUTS WITH TRIM RINGS. CLEAR SILICONE CAULK ALL JOINTS. SEE BUILDING SPECIFICATIONS SECTIONS 06 10 53 & 01 61 25. ALL COMPONENTS MUST BE ADA COMPLIANT. PROVIDE CONTINUOUS GALVANIZED METAL SUPPORT FRAME UNDER SINK TOP AS RECOMMENDED BY SINK TOP FABRICATOR, ATTACH TO BLOCKING INSIDE WALL, SEE GENERAL NOTE No. 3 FOR ADDITIONAL INFORMATION.
2. MIRROR UNIT FULL LENGTH TO MATCH SINK TOP, WITH SPRING LOADED MIRROR CLIPS & 'J' CHANNEL MIRROR SUPPORT. REFER TO BUILDING SPECIFICATIONS SECTION 08 80 00 FOR MIRROR MANUFACTURE, INSTALLATION, CARE, ETC. INFORMATION. MIRROR TO BE INSTALLED AFTER TILES HAVE BEEN APPLIED TO WALL.
3. FAUCET AND DRAIN, SEE BUILDING SPECIFICATIONS SECTION 22 42 00.
4. PROVIDE AN ADA ACCESSIBLE DECAL ON MIRROR AT EACH ADA COMPLIANT SINK LOCATION.
5. TRASH CHUTE TRIM RING. CONTRACTOR TO INSTALL A BEAD OF SILICONE BETWEEN FLANGE AND SINK TOP TO SEAL AND SECURE RING. REFER TO SPEC SECTION 10 28 13

GENERAL NOTES :

1. RECOMMENDED MINIMUM WIDTH FOR EACH VERSION OF SINK TOPS LISTED (FOR TRASH CANS, BRACES, ETC., CLEARANCE). TOPS MAY BE WIDER BASED ON DESIGN CONDITIONS.
2. (2) BOWLS SINK TOPS TO BE CONFIGURED SO AS THE ADA COMPLIANCE SINK IS ON OPEN END SIDE OF SINK OPPOSITE THE WALL ATTACHED SIDE.
3. ALL SINKS TOP TO HAVE COMBINATION END PANEL/SUPPORT BRACES AT LOCATIONS WITHOUT WING WALLS. ALL SINKS GREATER THAN SINGLE BOWL TO HAVE ADDITIONAL SUPPORT TO PREVENT SINK TOP FROM CRACKING, SUPPORT TO BE LOCATED SO AS NOT TO INTERFERE WITH TRASH RECEPTACLE OR PLUMBING.

SOLID SURFACE TOPS WITH SINKS	DATE : 9/12/18 DRAWN : ZAW
MASTER SPECIFICATION DETAIL	PSD-50

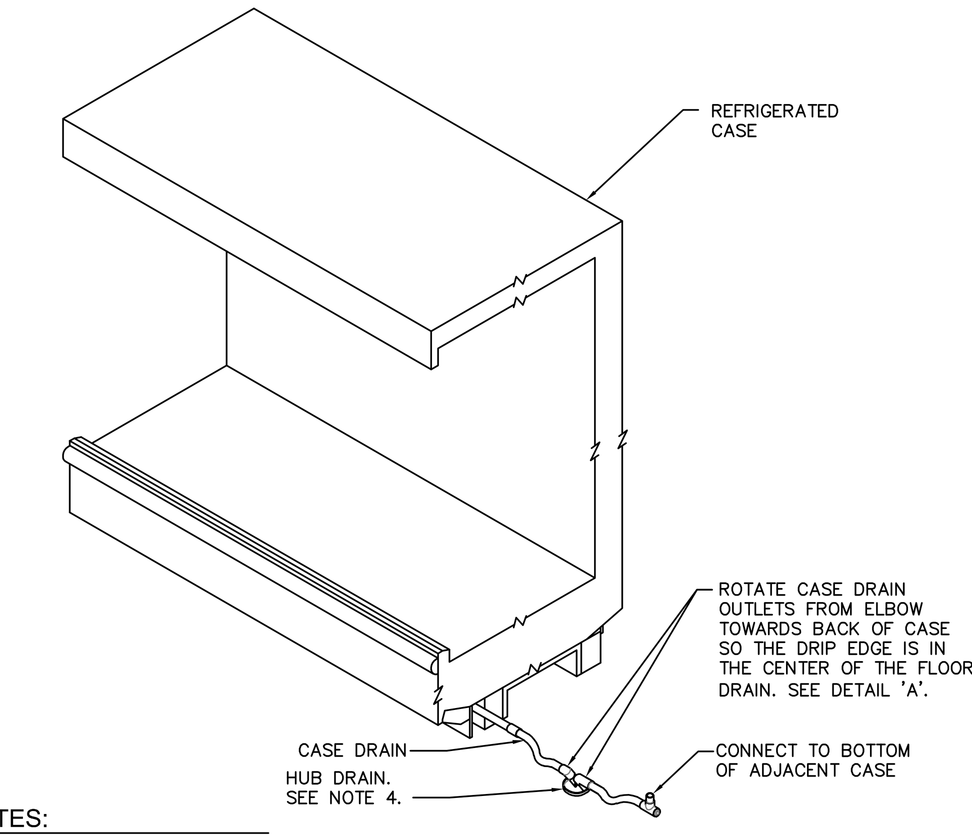

NOTES:

1. DO NOT USE CASE DRAIN SMALLER THAN THE NOMINAL DIAMETER OF PIPE OR WATER SEAL SUPPLIED WITH THE MERCHANDISER.
2. SLOPE THE CASE DRAIN IN THE DIRECTION OF FLOW 1/4" PER FT.
3. CASE DRAIN MUST BE SUPPORTED NO MORE THAN 24" FROM DRAIN HUB TEE.
4. PROVIDE A SUITABLE AIR BREAK BETWEEN FLOOD RIM OF FLOOR DRAIN AND OUTLET OF CASE DRAIN. AN ALTERNATIVE IS TO CUT THE LAST SECTION OF CASE DRAIN AT AN ANGLE.

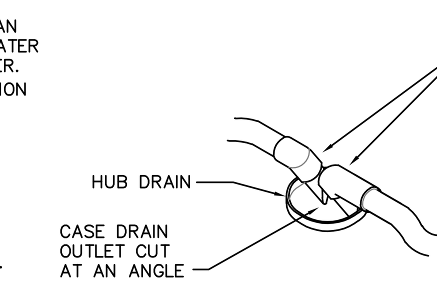

DETAIL A

CASE DRAIN DETAIL	DATE : 10/11/12 DRAWN : ZAW
MASTER SPECIFICATION DETAIL	PISD-1

CAPSTONE project services, plc
2211 WIDMAN WAY, SUITE 220
FORT MYERS, FL. 33901

COMMONWEALTH OF VIRGINIA
JOHN S. PARKER
Lic. No. 21813
PROFESSIONAL ENGINEER
Digitally Signed
2020.06.01 15:08:40-04'00'
SEAL

NOTE: THIS DOCUMENT MAY HAVE BEEN ELECTRONICALLY TRANSMITTED. IF UNSIGNED, IT CANNOT BE FILED FOR PUBLIC RECORD. PUBLIC RECORD FILINGS REQUIRE SIGNED AND SEALED DOCUMENTS.

BRANDT ENGINEERING, INC.
2840 POLO PARKWAY, SUITE 200
MIDLOTHIAN, VA 23113
PHONE: (804)794-6656
FAX: (804)794-8588
EMAIL: cadd@beiric.com
JOHNSON PARKER, PE
VA PE #: 021813

CONSULTANT

A REMODEL FOR:

KROGER R-215

7480 LEE HIGHWAY
FAIRLAWN, VA

PROJECT

6-1-2020
DATE CONSTRUCTION SET

PLUMBING STANDARD DETAILS (PSD)

SHEET TITLE

REVISIONS

MARK	DATE	DESCRIPTION

PROJECT NO:	20049
CAD DWG FILE:	20049–P5.1.dwg
DRAWN BY:	PC
CHK'D BY:	DM/JP

P5.1
SHEET NO.

6/1/2020 1:55:58 PM